AMCO INDUSTRIAL VALVES

● MANUFACTURERS ● EXPORTERS

PRODUCT DATA SHEET

AIV - A06

2PC BALL VALVE FLANGED 300#

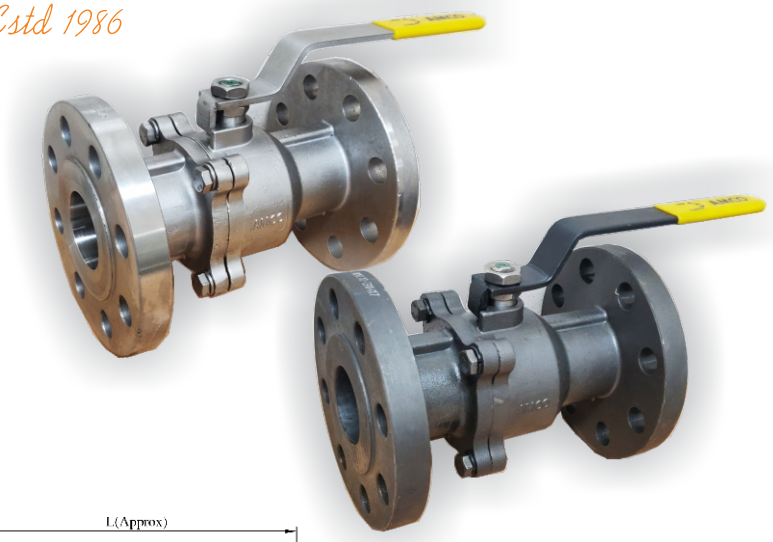

FEATURES

- Full Port (DN25 - DN150)
- Investment Casting
- Bi-directional
- Blowout Proof Stem
- High Integrity Stem Sealing
- Mirror Finished Stainless Steel Ball

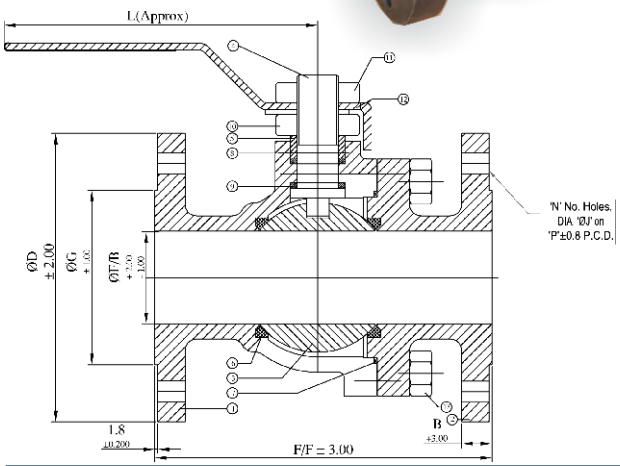

PRESSURE TEMPERATURE RATING

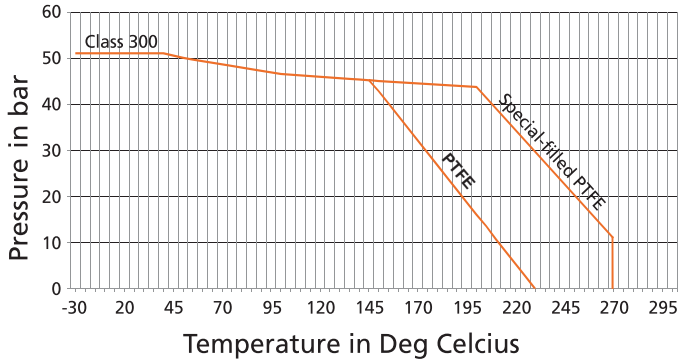

BILL OF MATERIAL

No.	Parts Name	Material		
1	Body	ASTM A351 Gr. CF8M	ASTM A351 Gr. CF8	ASTM A216 Gr. WCB
2	End Piece	ASTM A351 Gr. CF8M	ASTM A351 Gr. CF8	ASTM A216 Gr. WCB
3	Ball	ASTM A351 Gr. CF8M	ASTM A351 Gr. CF8	ASTM A351 Gr. CF8
4	Stem	AISI SS316	AISI SS304	AISI SS304
5	Gland	AISI SS304	AISI SS304	AISI SS304
6	Ball Seat	PTFE	PTFE	PTFE
7	Body Seal	PTFE	PTFE	PTFE
8	Gland Packing	PTFE	PTFE	PTFE
9	Stem Seal	PTFE	PTFE	PTFE
10	Gland Nut	AISI SS304	AISI SS304	MS
11	Lever Nut	AISI SS304	AISI SS304	MS
12	Lever	SS	SS	MS
13	Stud	AISI SS304	AISI SS304	MS
14	Lever Sleeve	PVC	PVC	PVC

STANDARDS AND TESTING

Design and Mfg.	BS 5351
Testing	BS 6755 Part I
End Connection	Flanged ASME B16.5 300# RF
Face to Face	ASME B16.10
Shell - Hydrostatic	79.5 kg/cm2
Seat - Hydrostatic	58.5 kg/cm2
Seat - Pneumatic	7 kg/cm2

★ *Special Material and Requirement available on request*

★★ *Discount*

DIMENSIONS (mm)

Size	F/B	F/F	ϕD	B	ϕG	P	ϕJ	N	L	T (Nm)	Wt.(Kg.)
DN25	25.2	165.7	124	17.5	51	89	19	4	160	11	4.3
DN40	38	190.5	156	20.5	73	114.5	22	4	220	32	8
DN50	51	215.9	165	22.5	92	127	19	8	220	55	10.2
DN65	63	241.3	190.5	25.5	105	149	22	8	295	94	16.2
DN80	76	282.6	209.5	28.5	127	168.5	22	8	295	110	20.7
DN100	101	304.8	254	32	157	200	22	8	395	147	37.5
DN150	151	403	318	36.5	216	270	22	12	475	620	